计算机网络第 5 章作业

07112303　　左逸龙　　1120231863

2026-05-03

Problem 1: Explain the difference between routing, forwarding, and switching.

> - routing 指根据网络拓扑和路由算法，计算到目的网络的路径，并生成路由表，偏向于路径计算。
> - forwarding 指路由器收到一个分组后，根据转发表查找下一跳或输出端口，并把分组转发出去，偏向于单个分组的实际转发。
> - switching 一般指网络设备内部将分组/帧从输入端口转移到输出端口的过程；在链路层交换机中，通常表现为根据 MAC 地址表选择合适端口转发帧。

Problem 2: For the network given in Figure 1, give global distance-vector tables like Figure 2 (where D is the distance, N is neighbor) when

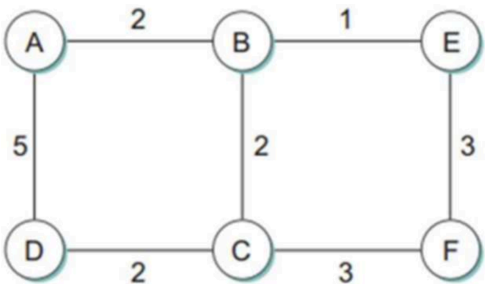

Figure 1: A graph of a network

Node	Distances and neighbors to reach node											
	A		B		C		D		E		F	
	D	N	D	N	D	N	D	N	D	N	D	N
A												
B												
C												
D												
E												
F												

Figure 2: Global Distance-Vector table

2.1 Each node knows only the distances to its immediate neighbors.

> | Node | Distances and neighbors to reach node | | | | | | | | | | | |
> |---|---|---|---|---|---|---|---|---|---|---|---|---|
> | | A | | B | | C | | D | | E | | F | |
> | | D | N | D | N | D | N | D | N | D | N | D | N |
> | A | 0 | - | 2 | B | ∞ | - | 5 | D | ∞ | - | ∞ | - |
> | B | 2 | A | 0 | - | 2 | C | ∞ | - | 1 | E | ∞ | - |

Node	Distances and neighbors to reach node											
	A		B		C		D		E		F	
	D	N	D	N	D	N	D	N	D	N	D	N
C	∞	-	2	B	0	-	2	D	∞	-	3	F
D	5	A	∞	-	2	C	0	-	∞	-	∞	-
E	∞	-	1	B	∞	-	∞	-	0	-	3	F
F	∞	-	∞	-	3	C	∞	-	3	E	0	-

2.2 Each node has reported the information it had in the preceding step to its immediate neighbors.

Node	Distances and neighbors to reach node											
	A		B		C		D		E		F	
	D	N	D	N	D	N	D	N	D	N	D	N
A	0	-	2	B	4	B	5	D	3	B	∞	-
B	2	A	0	-	2	C	4	C	1	E	4	E
C	4	B	2	B	0	-	2	D	3	B	3	F
D	5	A	4	C	2	C	0	-	∞	-	5	C
E	3	B	1	B	3	B	∞	-	0	-	3	F
F	∞	-	4	E	3	C	5	C	3	E	0	-

2.3 Step (b) happens a second time.

Node	Distances and neighbors to reach node											
	A		B		C		D		E		F	
	D	N	D	N	D	N	D	N	D	N	D	N
A	0	-	2	B	4	B	5	D	3	B	6	B
B	2	A	0	-	2	C	4	C	1	E	4	E
C	4	B	2	B	0	-	2	D	3	B	3	F
D	5	A	4	C	2	C	0	-	5	C	5	C
E	3	B	1	B	3	B	5	B	0	-	3	F
F	6	E	4	E	3	C	5	C	3	E	0	-

Problem 3: Suppose we have the forwarding tables shown in Figure 3 for nodes A and F in a network where all links have cost 1. Give a diagram of the smallest network consistent with these tables.

A

Node	Cost	Nexthop
B	1	B
C	2	B
D	1	D
E	2	B
F	3	D

F

Node	Cost	Nexthop
A	3	E
B	2	C
C	1	C
D	2	E
E	1	E

Figure 3: Forwarding table

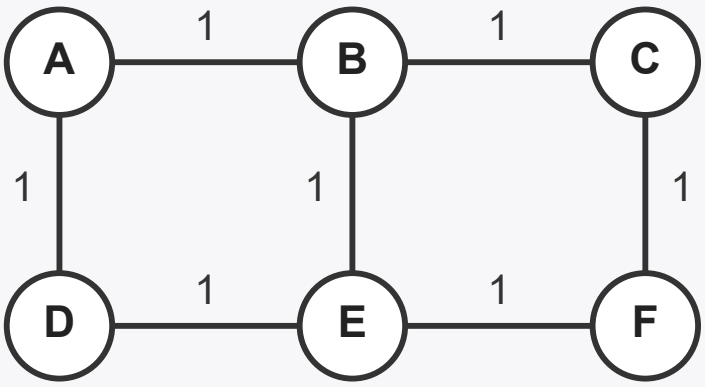

Problem 4: An unfragmented IP packet, shown in Figure 4(a), has 1400 bytes of data and a 20-byte IP header. When the packet arrives at router RA, which has an MTU of 532 bytes, it has to be fragmented. The 3 fragmented packets are shown in Figure 4(b). Suppose these fragments all pass through another router RB with an MTU of 380 bytes, not counting the link header.

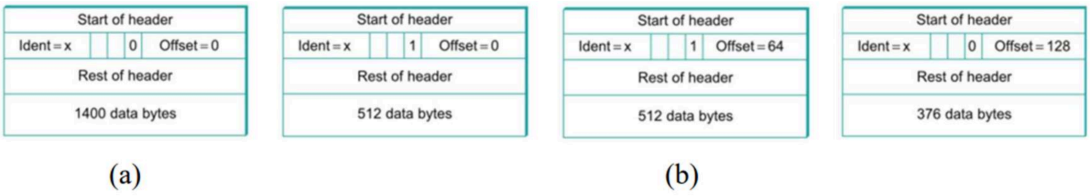

Figure 4: (a) One unfragmented packet, (b) Three fragmented packets

4.1 Show the fragments the router RB produced.

RB 的 MTU 为 380 字节，去掉 20 字节 IP 首部后，每个分片最多有 360 字节数据。
由于 360 是 8 的整数倍，所以可以作为非最后分片的数据长度。

原分片	数据长度	MF	Offset
1	360	1	0
1	152	1	45
2	360	1	64
2	152	1	109
3	360	1	128
3	16	0	173

因此 RB 共生成 6 个分片。

4.2 If the packet were originally fragmented for this MTU, how many fragments would be produced?

若一开始就按 380 字节 MTU 分片，则每片最多仍是 360 字节数据。

原数据长度为 1400 字节： $1400 = 360 \times 3 + 320$

所以会产生 4 个分片，数据长度分别为 $360, 360, 360, 320$ 字节。

对应 offset 为 $0, 45, 90, 135$。

Problem 5: What is the maximum bandwidth at which an IP host can send 576-byte packets without having the Ident field wrap around within 60 seconds? Suppose that IP's maximum segment lifetime (MSL) is 60 seconds; that is, delayed packets can arrive up to 60 seconds late but no later. What might happen if this bandwidth were exceeded?

IP 的 Ident 字段为 16 bit，因此共有 $2^{16} = 65536$ 个取值。

为了不在 60 秒内回绕，最多只能发送 65536 个分组。

每个分组大小为 576 字节，即 $576 \times 8 = 4608$ bit。

所以最大带宽为 $R = \frac{65536 \times 4608}{60} \approx 5.03 \times 10^6$ bps

即约为 5.03 Mbps。

如果超过这个带宽，Ident 字段可能在旧分组仍可能到达时重复使用，接收方可能把不同 IP 分组的分片错误地重组在一起。

Problem 6: An organization has been assigned the prefix 200.1.1.0/24 and wants to form subnets for four departments, with hosts as follows:

Department A 72 hosts,

Department B 35 hosts,

Department C 20 hosts,

Department D 18 hosts.

There are 145 hosts in all.

6.1 Give a possible arrangement of subnet masks to make this possible.

> 按主机数从大到小分配。
>
> A 需要 72 个主机地址，所以至少要 7 位主机号，即 /25。
>
> B 需要 35 个主机地址，所以至少要 6 位主机号，即 /26。
>
> C、D 分别需要 20 和 18 个主机地址，所以都至少要 5 位主机号，即 /27。

部门	主机数	子网	子网掩码	可用主机范围
A	72	200.1.1.0/25	255.255.255.128	200.1.1.1 - 200.1.1.126
B	35	200.1.1.128/26	255.255.255.192	200.1.1.129 - 200.1.1.190
C	20	200.1.1.192/27	255.255.255.224	200.1.1.193 - 200.1.1.222
D	18	200.1.1.224/27	255.255.255.224	200.1.1.225 - 200.1.1.254

> 这样可以刚好用完整个 200.1.1.0/24 地址块。

6.2 Suggest what the organization might do if department D grows to 34 hosts.

> 若 D 增长到 34 台主机，则 /27 不够，因为 /27 只有 $2^5 - 2 = 30$ 个可用主机地址。
>
> 此时 D 至少需要 /26，即 62 个可用主机地址。
>
> 但原来的 /24 已经被 A、B、C、D 四个子网刚好用完，无法直接扩大 D。
>
> 因此组织可以申请更大的地址块，例如 /23，或者再申请一个额外的地址块给 D 使用。

Problem 7: A router has just received the following new IP addresses: 57.6.96.0/21, 57.6.104.0/21, 57.6.112.0/21, and 57.6.120.0/21. If all of them use the same outgoing line, can they be aggregated? If so, to what? If not, why not?

> 可以聚合。
>
> 这四个地址块分别覆盖：
>
> - 57.6.96.0/21：57.6.96.0 到 57.6.103.255
> - 57.6.104.0/21：57.6.104.0 到 57.6.111.255
> - 57.6.112.0/21：57.6.112.0 到 57.6.119.255
> - 57.6.120.0/21：57.6.120.0 到 57.6.127.255
>
> 合起来正好是 57.6.96.0 到 57.6.127.255。
>
> 第三个字节从 96 到 127，二进制公共前缀为 011，所以前缀长度为 $16 + 3 = 19$。
>
> 因此可聚合为 57.6.96.0/19。

Problem 8: Given the network in Figure 5, determine the routing table of R2 by aggregating the routes. The main entries of the routing table are shown in Figure 6.

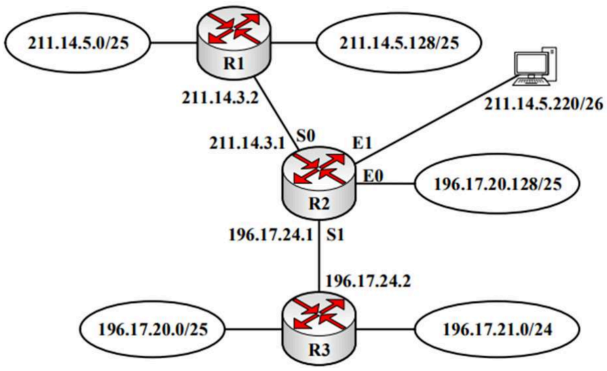

Figure 5: A network

Destination	Mask	Next-hop	Interface	Metric

Figure 6: Routing Table

R1 后面的两个网段 211.14.5.0/25 和 211.14.5.128/25 可以聚合为 211.14.5.0/24。

R3 方向的 196.17.20.0/25 和 196.17.21.0/24 可以和 196.17.20.128/25 所在范围一起概括为 196.17.20.0/23。

Destination	Mask	Next-hop	Interface	Metric
211.14.5.0	255.255.255.0	211.14.3.2	S0	1
196.17.20.0	255.255.254.0	196.17.24.2	S1	1

其中 R2 的直连网络仍按直连路由匹配，实际转发时采用最长前缀匹配。